MOUNTING GUIDELINES FOR MMSP-3901

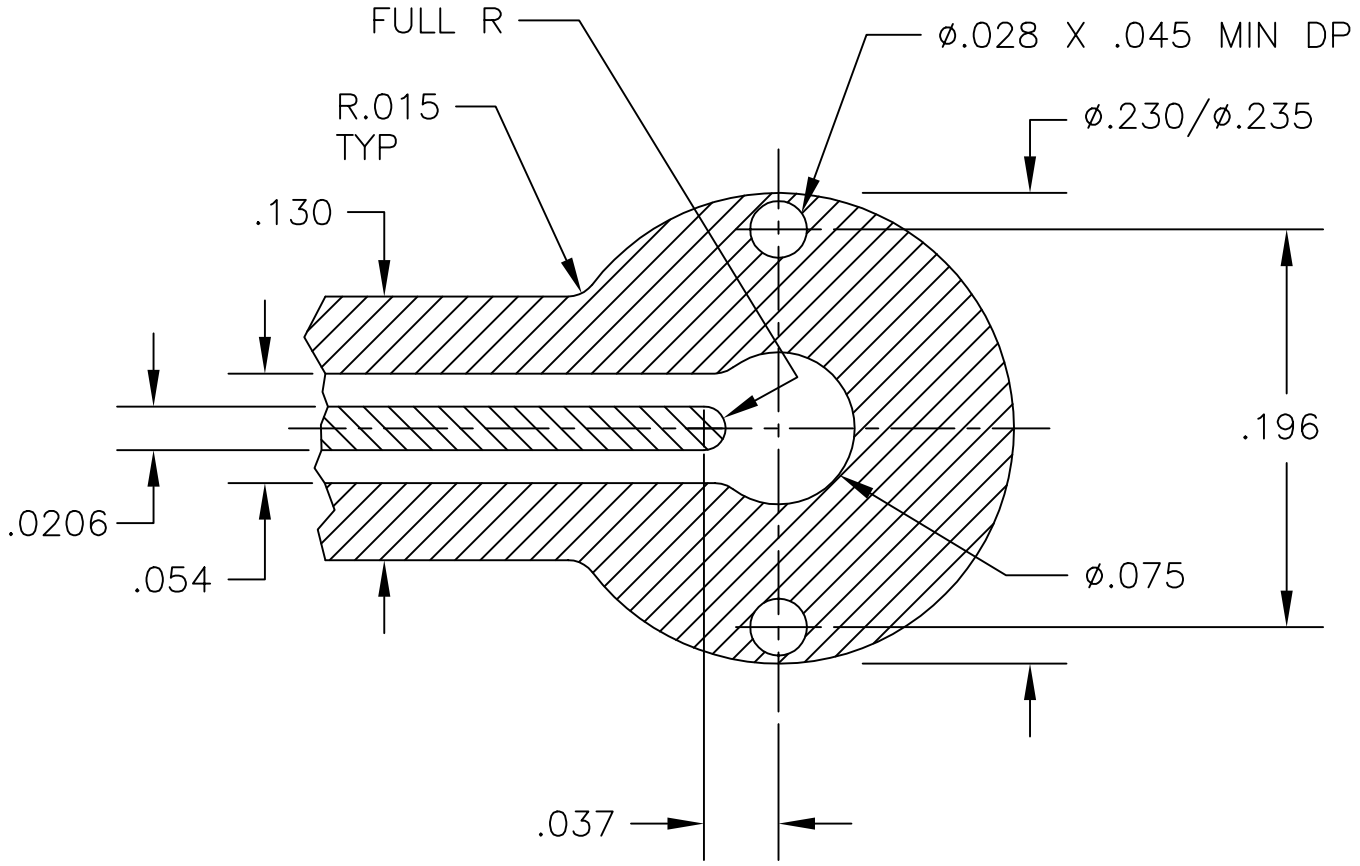

THE ABOVE DIMENSIONS ARE GUIDELINES ONLY. CHANGES MAY BE REQUIRED DUE TO DIFFERING MATERIALS, PROCESSES, TYPE OF BRAZE, SOLDER OR EPOXY.

MICRO–MODE PRODUCTS, INC.
The Reliable Connection to the Future
El Cajon, CA 92020
ph 619.449.3844
www.micromode.com

CAGE CODE 15907

REF: .

MOUNTING GUIDELINES FOR MMSP–3901

DEFAULT TOLERANCES: .XXXX ± .0010 .XXX ± .001

PART NO. MMAP–5139

REVISION 02

SHEET 1 OF 1 | OL5139 03–22–02 EB RF

PART NO. MMAP–5139
MOUNTING GUIDELINES